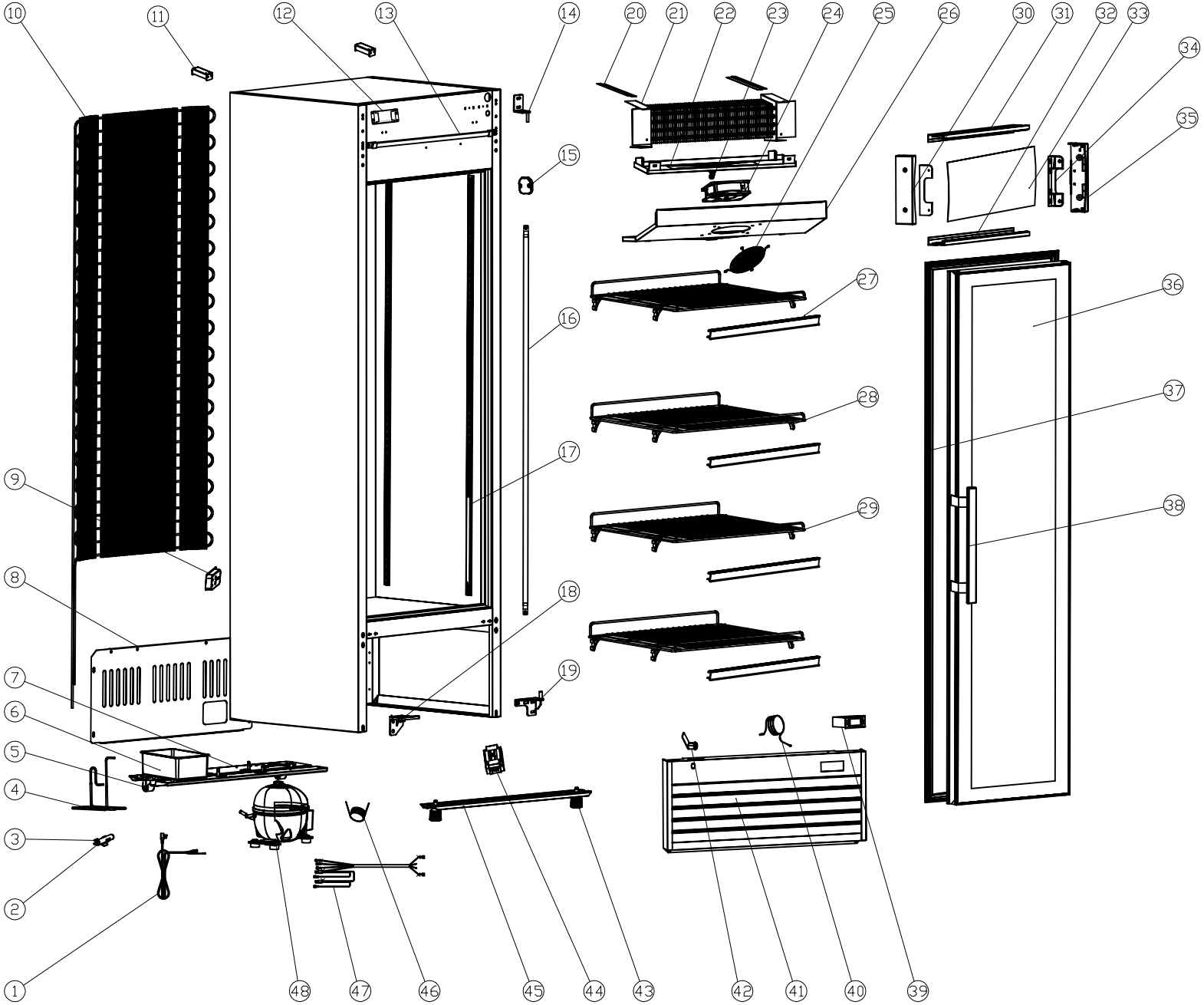Spare parts list for LG-282BF